PRODUCT DIMENSIONS

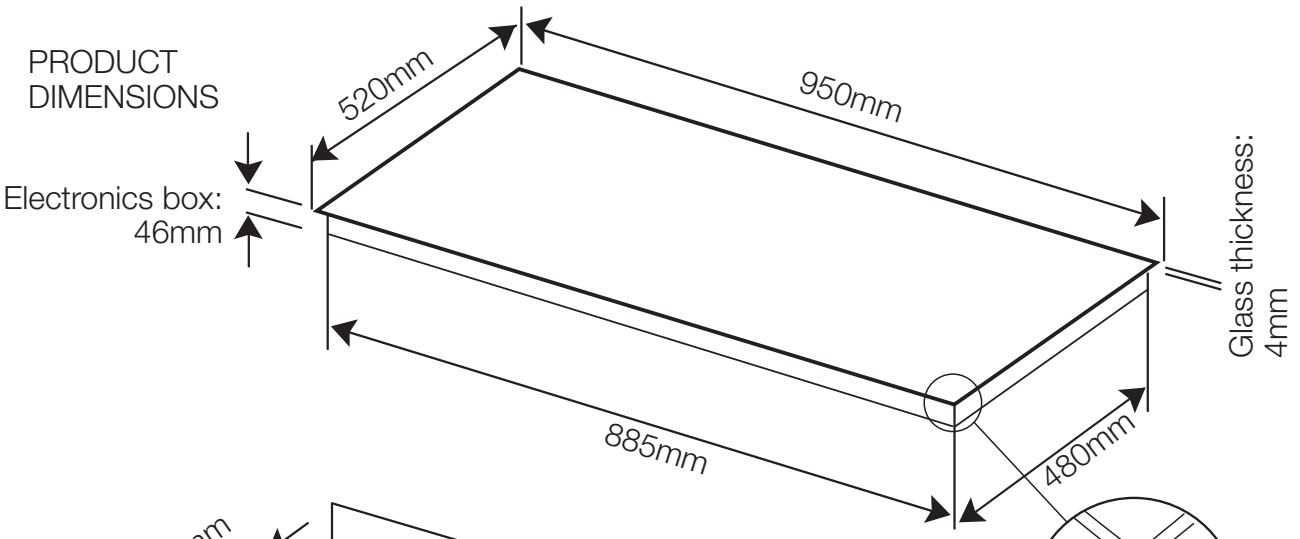

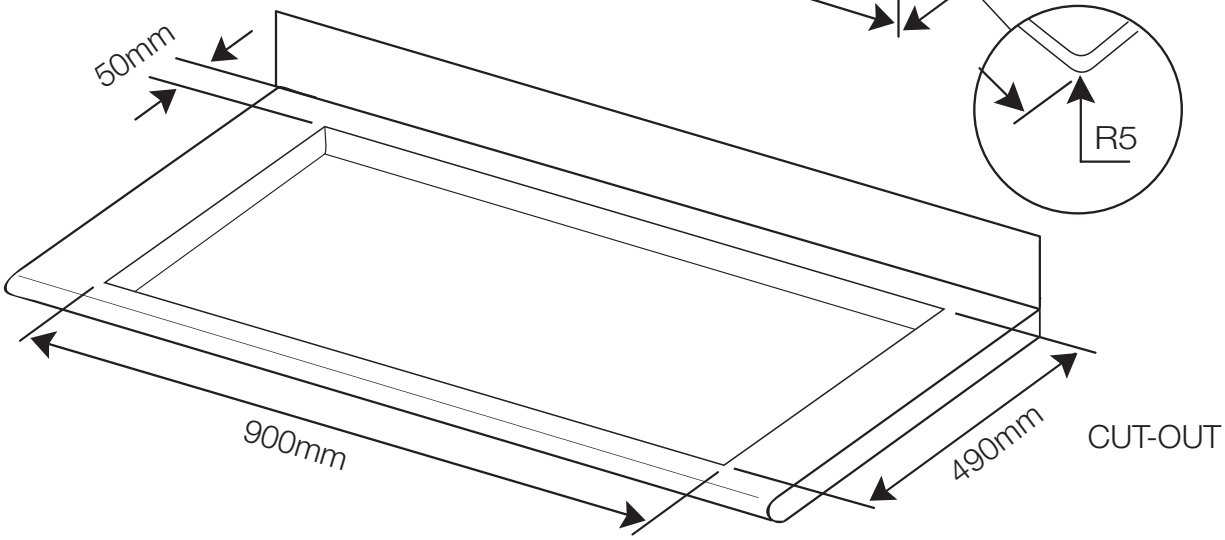

CUT-OUT

FLUSH INSTALLATION

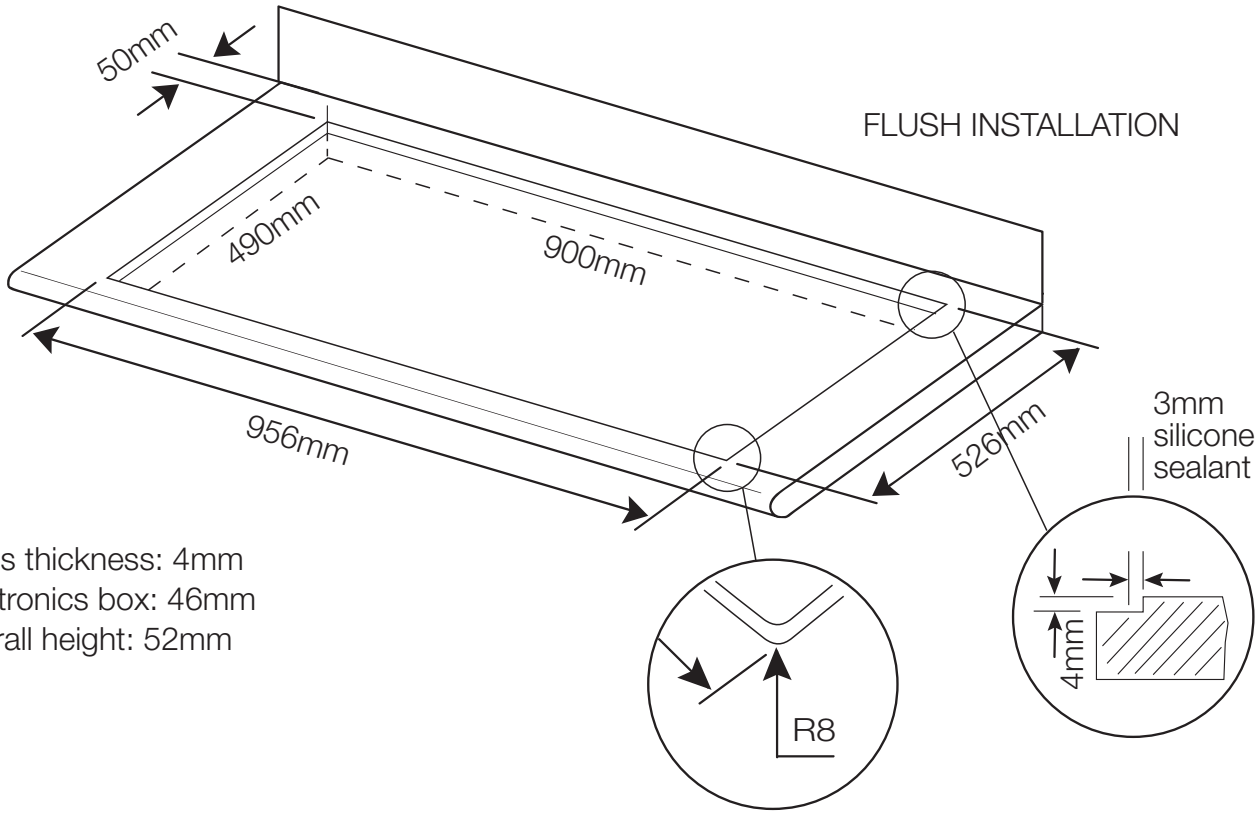

Glass thickness: 4mm
Electronics box: 46mm
Overall height: 52mm